RoHS
COMPLIANT

Surface Mount Schottky Rectifier

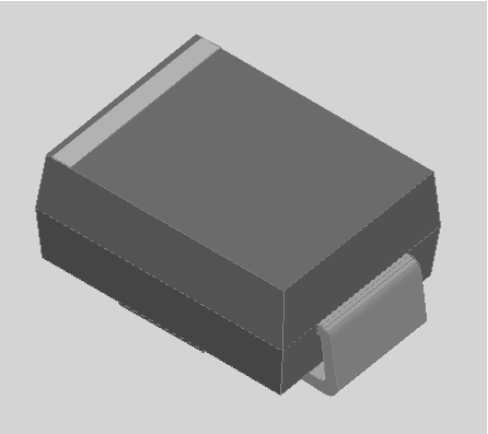

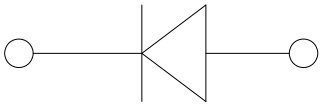

Features

- /RZ SURILOH SDFNDJH
- ,GHDO IRU XVH LQ RZ YROWDJH SRZHU SXSSOLHV &&7 &&&&

v

Disclaimer

7KH LQIRUPDWLRQ SUHVHQWHG LQ WKLV GRFXPHQW LV EHOLHYHG WR EH DFFXUDWH &RQWURO &RPSRQHQWV &RUSRUDWLRQ &&&&